Standard Euro Mortise

Passage 2" Backset Function 10 C90

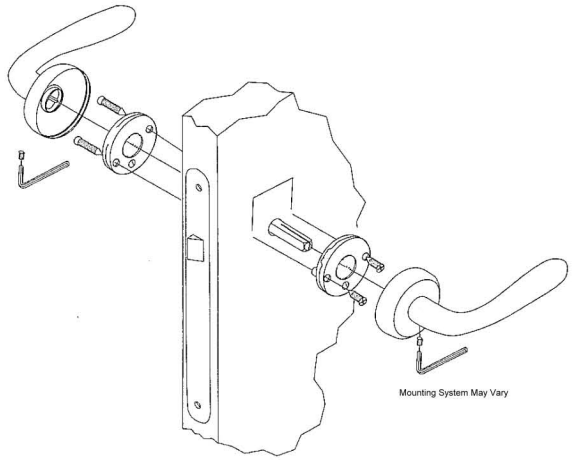

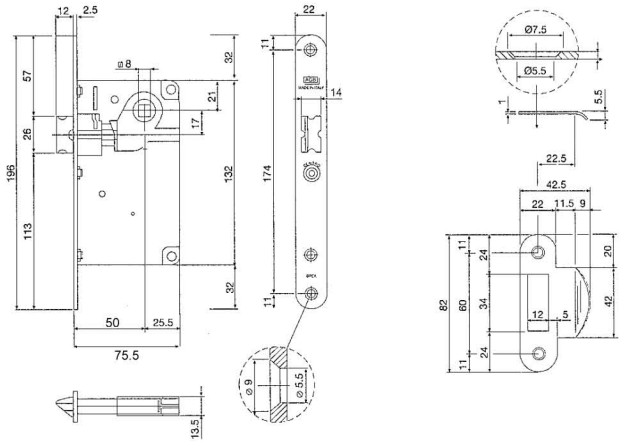

Privacy 2" Backset Function 20 C90B

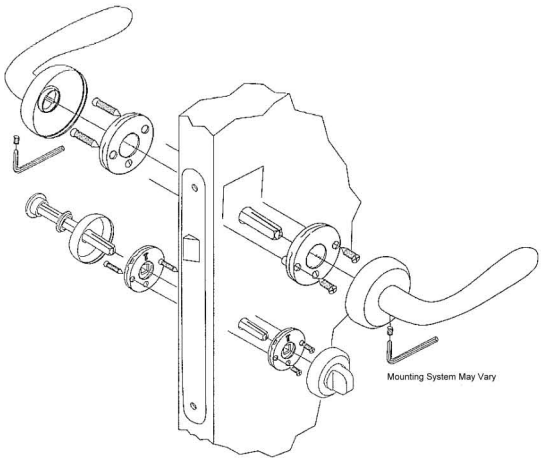

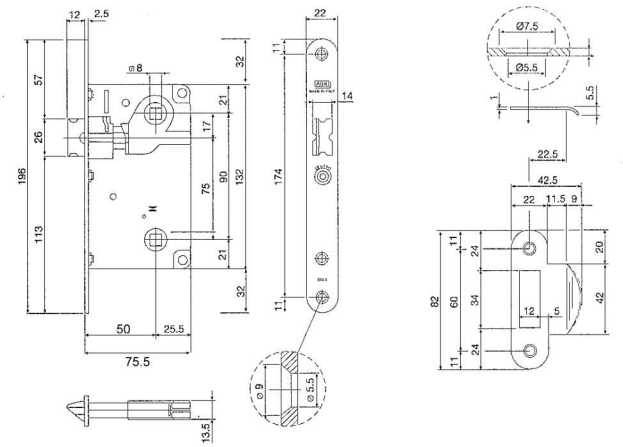

Keylock 2" Backset Function 40 C85

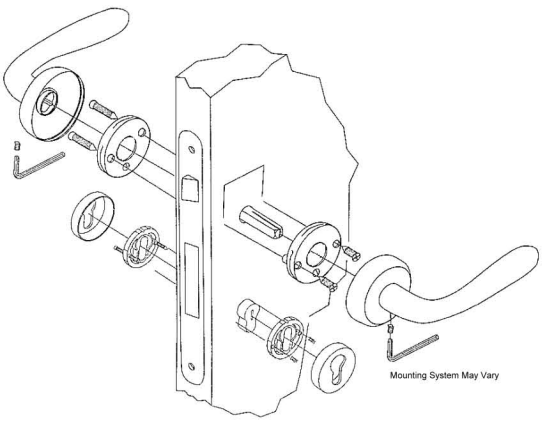

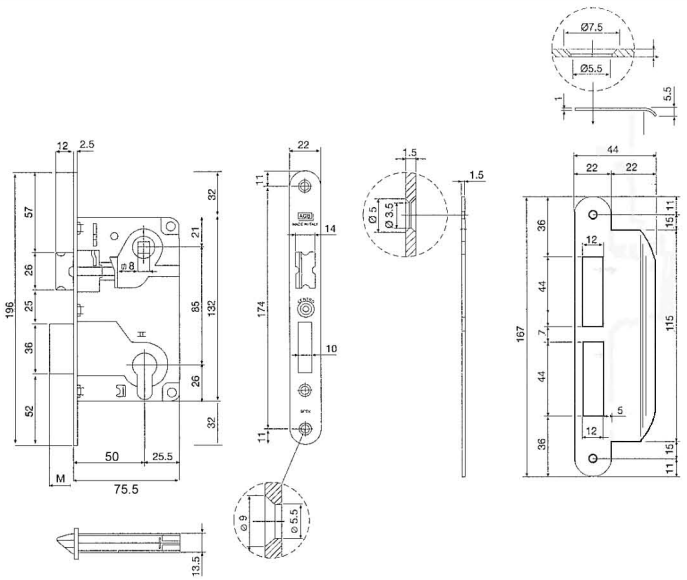

All dimensions in millimetres.

January 2003